HYDAC INTERNATIONAL

AquaSensors
AS 1200

2 switching outputs or analogue outputs

Saturation Level	Temperature

Features

- No calibration to different types of oils required
- Pressure-resistant, even with pulsations
- Wide fluid temperature range
- Individual configuration
- Early recognition of water problems, resulting in avoidance of disruptions and unnecessary operation interruptions

Description

The AquaSensor AS 1200 is an advancement of the proven AS 1000 series for the online-detection of water in hydraulic oils and lubrication fluids as well as in diesel, especially designed as an OEM sensor for condition monitoring. It measures the degree of saturation and the temperature of the fluid.

In the version with 2 analogue outputs, the AS 1200 transmits the values for the degree of saturation and the temperature as a 4 .. 20 mA signal.

In the version with two switching outputs, the AS 1200 can be configured by the user via the HYDAC service units HMG 2500 and HMG 4000, the Condition Monitoring Unit CMU 1000 and the interface module CSI-B-2. The following parameters can be adjusted:

- Saturation level/temperature
- Switching points
- Switching mode of switch outputs
- Switching direction
- Switching delay times
- Operating temperature range

Application fields

Applications are mainly in condition monitoring.
The AS 1200 therefore enables hydraulic and lubrication oils as well as diesel to be monitored accurately, continuously and online. As water problems are detected early on, malfunctions and unnecessary downtime can be reliably avoided.

Technical data

Input data	
Saturation Level	0 .. 100 %
Temperature	-25 .. 100 °C
Operating pressure	-0.5 .. 50 bar
Pressure resistance	≤ 630 bar
Mechanical connection	G3/8 A DIN 3852
Tightening torque, recommended	25 Nm
Parts in contact with fluid	Mechanical connection: Stainless steel / ceramic with vacuum-metallised coating Seal: FKM
Output data	
Pin 2: Saturation level	
Output signal	4 .. 20 mA (corresponds to 0 .. 100 %); R_{Lmax} = (U_B – 10 V) / 20 mA [kΩ] or switching output (configurable)
Calibration accuracy	≤ ± 2 % FS max.
Accuracy in media measurements	≤ ± 3 % FS typ.
Response time [1]	~ 2 min. in humid oil
Pressure dependence	± 0.025% FS / bar
Pin 4: Temperature	
Output signal	4 .. 20 mA (corresponds to -25 .. 100 °C); R_{Lmax} = (U_B – 10 V) / 20 mA [kΩ] or switching output (configurable)
Accuracy	≤ ± 2 % FS max.
Pin 5:	**HSI** (**H**YDAC **S**ensor **I**nterface) automatic sensor detection
Switching outputs	
Design	NPN or PNP transistor outputs (configurable as N/O or N/C)
Switching current	max. 250 mA per output
Environmental conditions	
Compensated temperature range	0 .. +90 °C
Operating temperature range [2]	-40 .. +100 °C / -25 .. +100 °C
Storage temperature range	-40 .. +100 °C
Fluid temperature range [2]	-40 .. +125 °C / -25 .. +125 °C
Viscosity range	1 .. 5000 cSt
Flow velocity	< 5 m/s
Fluid compatibility [3]	Mineral oil-based fluids, diesel or ester-based fluids (HEES, HETG)
CE mark	EN 61000-6-1 / -2 / -3 / -4
Vibration resistance acc. to DIN EN 60068-2-6	7.5 mm (5 Hz ≤ f < 8.2 Hz) 2 g (8.2 Hz ≤ f < 2000 Hz)
Shock resistance acc. to DIN EN 60068-2-27	20 g (11 ms in 3 axes)
Protection type acc. to DIN EN 60529 [4]	IP 67
Other data	
Supply voltage	12 .. 32 V DC
Residual ripple of supply voltage	≤ 5 %
Current consumption	≤ 30 mA without outputs
Weight	~ 145 g

Note: Reverse polarity protection, short circuit protection provided.

FS (**F**ull **S**cale) = relative to complete measuring range

[1] Response time to a step change in RH. Time for the RH output to change by 63 % of the total RH change, RH = Relative Humidity

[2] In the standard up to -25 °C with FKM seal, -40 °C on request

[3] Other fluids on request

[4] With mounted mating connector in corresponding protection type

Device dimensions

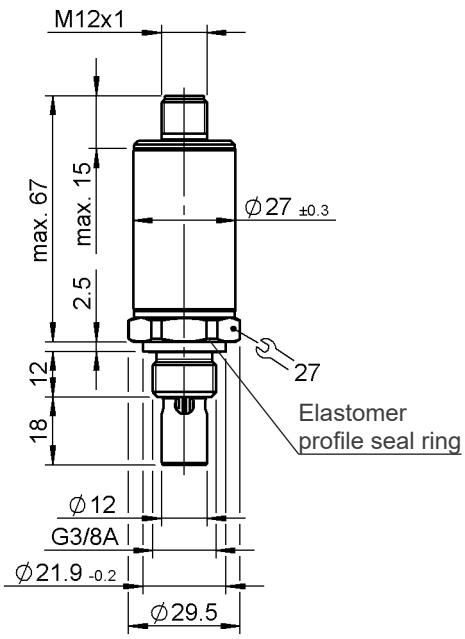

Pin connections

M12x1, 5 pole	Pin	Output: C	Output: 2
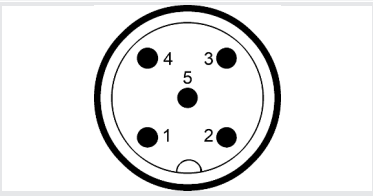	1	$+U_B$	$+U_B$
	2	Saturation level 4 .. 20 mA	SP2, Warning
	3	0 V	0 V
	4	Temperature 4 .. 20 mA	SP 1, Alarm
	5	HSI	HSI

HSI = **H**YDAC **S**ensor **I**nterface (HYDAC's own communication interface)

Display, read-out and configuration options

HDA 5500-1-1-xC-000
Digital Display Unit with 2 programmable switching outputs, specifically designed for use with the AS 1000
HDA 5500-1-1-AC-000 Order no.: 908869
HDA 5500-1-1-DC-000 Order no.: 908870

HMG 510
Portable 2-channel data recorder, especially designed for the use with HSI and SMART sensors
Order no.: 909889

HMG 2500 and HMG 4000
Portable data recorders with fully graphics-capable colour display for displaying, recording and processing measured values and for the configuration of HSI and SMART sensors

CMU 1000
Electronic evaluation unit for online measured value monitoring as well as for the configuration of HSI and condition monitoring sensors
Order no.: 920718

CSI-B-2
Interface module, enables the configuration of HSI and condition monitoring sensors using HYDAC PC software CMWIN
Order no.: 920134

Information on other read-out options can be found on our website at www.hydac.com or please contact your HYDAC representative.

Model code

AS 1 2 0 8 - X - 000

Fluid [1)]

2 = Mineral oil-based fluids, diesel or ester-based fluids (HEES, HETG) [2)]

Mechanical connection

0 = G3/8 A ISO 1179-2

Electrical connection

8 = Plug M12X1, 5 pole (mating connector not included)

Exit

C = Output 1 Pin 2 saturation degree (4 .. 20 mA)
Output 2 Pin 4 temperature (4 .. 20 mA)

2 = 2 switching outputs, configurable

Modification number

000 = Standard

Note:
[1)] Special fluids on request
[2)] FKM is usually compatible with diesel, however, this depends on what additives are used. Please contact your diesel supplier and ask for confirmation of the compatibility in combination with FKM.

Note

The information in this brochure relates to the operating conditions and applications described.
For applications or operating conditions not described, please contact the relevant technical department.
Subject to technical modifications.

HYDAC ELECTRONIC GMBH
Hauptstraße 27
66128 Saarbrücken/Germany
Telephone +49 (0)6897 509-01
Fax +49 (0)6897 509-1726
E-mail: electronic@hydac.com
Internet: www.hydac.com