HYDAC INTERNATIONAL

Fluid level sensor
Variable switch points
FSKV

SYMBOL
Size 127 - 381

Type W – changing contact

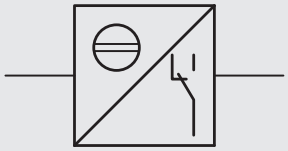

DESCRIPTION
HYDAC fluid level sensors monitor the fluid level in a hydraulic container. Adjustable switch contacts mounted on the side of the frame are used to determine both the minimum and the maximum fluid level on the basis of an electrical signal. The switching signal can be received as a warning for level control or used in the PLC controller directly.

The fluid enters the unit via the lower connection bore and pushes a float up the tube. The float then indicates the level of the fluid in the tank. If the float reaches a specified critical level, it actuates the switch.

A visual display of the fluid level is provided additionally in all versions.

PRODUCT FEATURES
- Nominal size 127 – 381 mm
- Round riser tube made of glass
- Connectors made of PA or aluminium
- Housing made of aluminium or stainless steel
- Change-over switch contact
- 2 adjustable switch points (1x minimum, 1x maximum), additional alternative switch points also possible.

CUSTOMER BENEFITS
- Robust design
- Simple standardised installation conditions
- Reduced risk of damage to the O-ring for the bolt resulting from incorrect installation at the tank

No.	Description
(1)	Connector (2x)
(2)	Housing frame
(3)	Float
(4)	Reed switch
(5)	Riser tube with contrast pane
(6)	Banjo bolt (2x)
(7)	Washer (2x)
(8)	Seal (2x)
(9)	Nuts (2x)

DESIGN

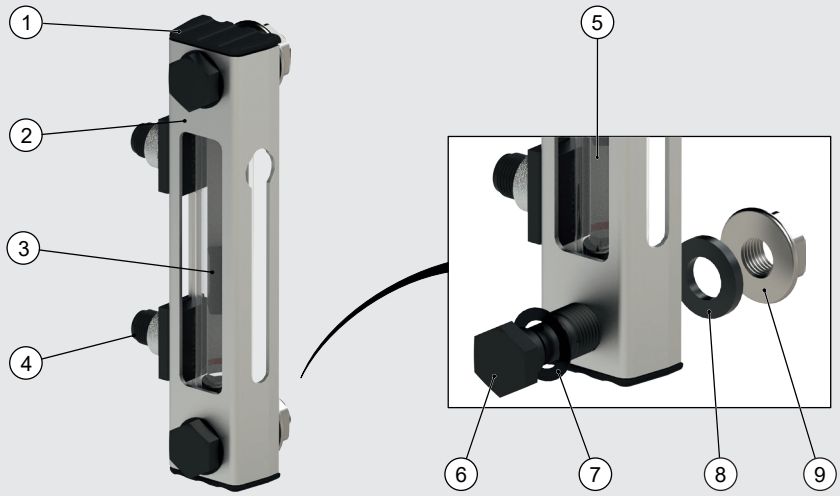

Note
Component may differ from illustration.

Model code
(also order example)

FSKV - 0127 - 0 . 1W - 11000 / O- / M12 . 000 2SP

Designation
FSKV = fluid level sensor with variable switch points

Nominal size (≅ centre distance of bolts in mm)
0127, 0176, 0254, 0305, 0381

Sealing material
0 = NBR (Perbunan)

Connector design
0 = round connector M8x1, 3-pole, male;
DIN EN 61076-2-104; side connection on frame
1 = round connector M12x1, 4-pole, male;
DIN EN 61076-2-101, A-coded; side connection on frame

Switching function
W = changing contact opens and closes at switching level

Tube geometry, materials
Tube geometry
1 = round tube Ø19

Material of tube
1 = glass

Material of connectors
0 = PA (seal = sealing washer)
1 = aluminium (seal = sealing washer)
2 = aluminium (seal = quad ring)
3 = aluminium (seal = O-ring)

Material of frame
00 = aluminium
03 = stainless steel

Options
Contrast pane
O = no contrast pane
H = HYDAC contrast pane
N = neutral contrast pane

Additional thermal function
- = no additional function (standard)
FF = preparation for sensor thermometer
FT100 = sensor thermometer 100 mm
FT200 = sensor thermometer 200 mm
FT300 = sensor thermometer 300 mm
TS60-O = temperature switch NC, nominal temperature 60 °C
TS70-O = temperature switch NC, nominal temperature 70 °C
TS80-O = temperature switch NC, nominal temperature 80 °C
TFP100 = temperature probe -40 °C to +125 °C
TFP1000 = temperature probe -40 °C to +125 °C
Notice: The TS temperature switch cannot be combined with the FT temperature gauge.

Type of connection
M12 = M12 (standard)
M10 = M10 (not for TS or TFP)

Connecting elements
Material of bolts/nuts
0 = bolt and poss. nut steel (surface protection galvanised, chromium(VI)-free)
2 = bolt and poss. nut stainless steel (M12 only M12)

Seal
0 = with seal
1 = without seal

Mounting nuts
0 = with mounting nuts
1 = without mounting nuts

Number of switch points
1SP = 1 switch point
2SP = 2 switch points (1x minimum, 1x maximum)
Additional switch points on request

NOTICE
As regards the relevant operating and environmental conditions (temperature, dynamics, cleaning), the suitability of the product must be verified by the vehicle/system manufacturer or operator.

If you have any questions, please get in touch with your contact in Technical Sales.

TECHNICAL DATA

Connection	Banjo bolt M12x45 or M10x45				
Type of connection	Threaded hole (M12 or M10) or through-bore (Ø13 or Ø11)				
Installation	vertically on the tank wall				
Weight	Size 0127	Size 0176	Size 0254	Size 0305	Size 0381
	0.21 kg	0.23 kg	0.26 kg	0.28 kg	0.30 kg
Design of riser tube	Round tube Ø19				
Media	Mineral oil in acc. with DIN 51524 Part 1 and 2, water, oil, emulsions and synthetic fluids, other fluids on request				
Viscosity of fluid	max. 2000 mm²/s				
Max. operating pressure	0.5 bar (higher pressures on request)				
Flow direction	no orientation restrictions				
Ambient temperature	-20 °C to +95 °C				
Temperature of operating fluid	-20 °C to +95 °C				
Material: Connectors	PA or aluminium				
Riser tube	Glass				
Housing frame	Aluminium or stainless steel				
Seal ring	NBR				
Bolts, nuts	Steel galvanised or stainless steel				
Accessories	Shut-off elements (ABV, ABK, ABS), protective cover				

NOTICE

As regards the relevant operating and environmental conditions (temperature, dynamics, cleaning), the suitability of the product must be verified by the vehicle/system manufacturer or operator.

If you have any questions, please get in touch with your contact in Technical Sales.

ELECTRICAL SPECIFICATIONS

Design of plug connector	Round connector M8x1, 3-pole, male; DIN EN 61076-2-104 Round connector M12x1, 4-pole, male; DIN EN 61076-2-101, A-coded
Switching function	Type W / changing contact (opens or closes at switching level)
Number of switch points	1 or 2 (additional switch points on request)
Contact load	max. 8 W
Input voltage	1 to 50 V AC/DC
Switching current	max. 0.2 A
Protection class	IP 65

CONTACT ASSIGNMENT for two switch points

(As delivered, switch point at bottom activated by magnetic field)

Round connector M12x1, 4-pole, male; DIN EN 61076-2-101, A-coded

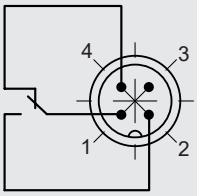

Contact assignment / Float setting	Bottom reed contact		Top reed contact	
Minimum	1 - 2	NO	1 - 4	NC
Maximum	1 - 4	NC	1 - 2	NO

Round connector M8x1, 3-pole, male; DIN EN 61076-2-104

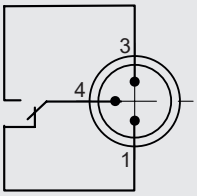

Contact assignment / Float setting	Bottom reed contact		Top reed contact	
Minimum	4 - 3	NO	4 - 1	NC
Maximum	4 - 1	NC	4 - 3	NO

NOTICE

In the case of just one reed contact, the switch point is at the top **or** at the bottom.

DIMENSIONS (in mm)

FSKV 0127 - 0381

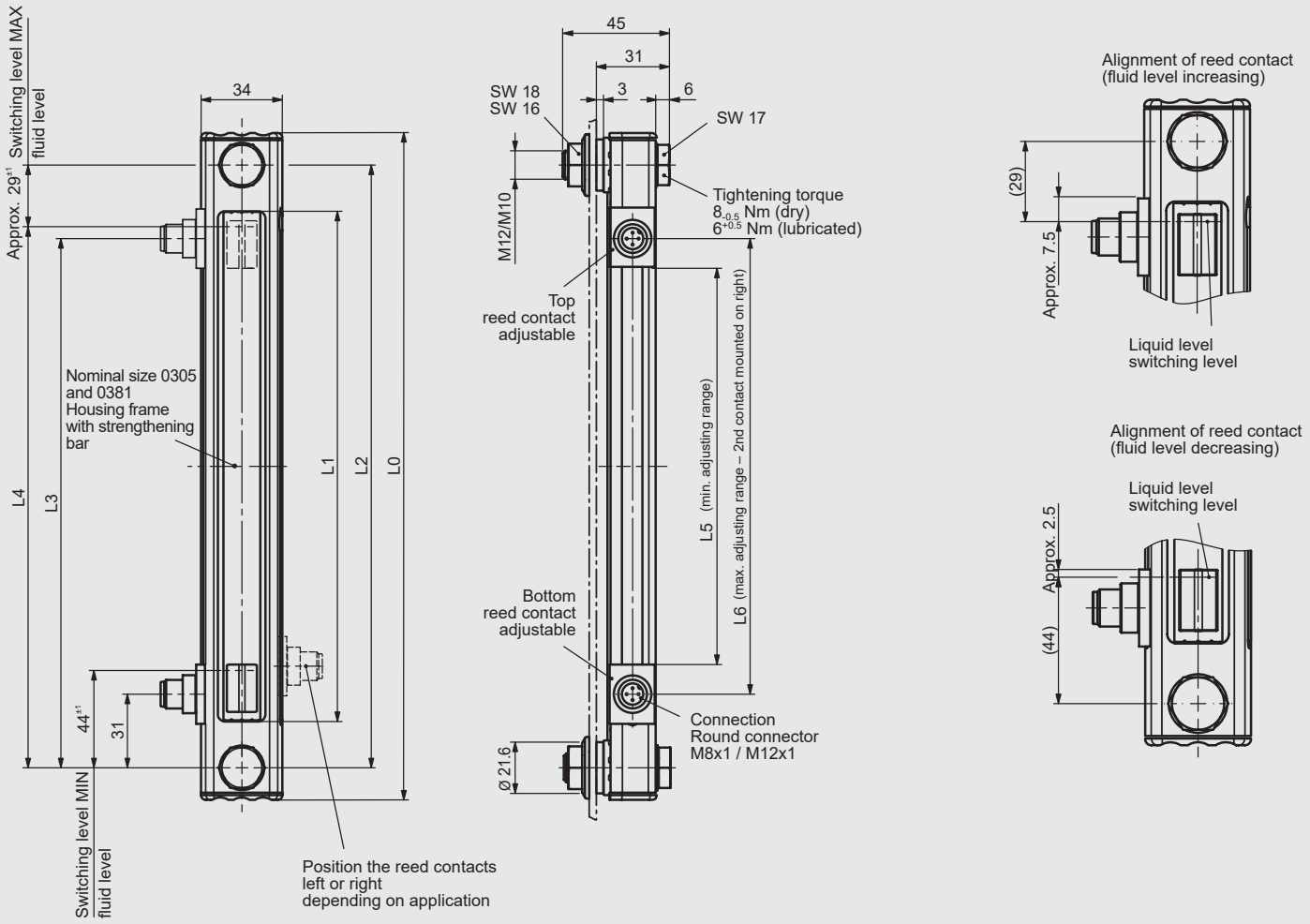

Nominal size ≅ centre distance of bolts	**L0**		**L1**		**L2**		**L3**		**L4**		**L5**		**L6**	
	[mm]	[in]	[mm]	[in]	[mm]	[in]	[mm]	[in]	[mm]	[in]	[mm]	[in]	[mm]	[in]
0127	154	6.1	88	3.5	127	5	96	3.8	101	4	40	1.6	65	2.6
0176	203	8.0	137	5.4	176	7	145	5.7	150	5.9	89	3.5	114	4.5
0254	281	11.1	215	8.5	254	10	223	8.8	228	9	167	6.6	192	7.6
0305	332	13.1	266	10.5	305	12	274	10.8	279	11	218	8.6	243	9.6
0381	408	16.1	342	13.5	381	15	350	13.8	355	14	294	11.6	319	12.6

SEAL VARIANTS for tank connection

Gasket (standard)	Quad ring (only for alum. connectors)	O-ring (only for alum. connectors)
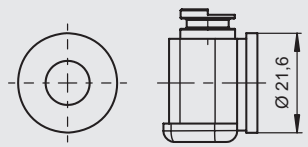	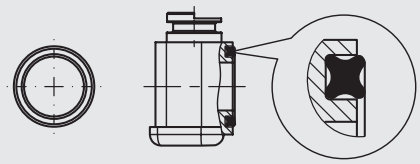	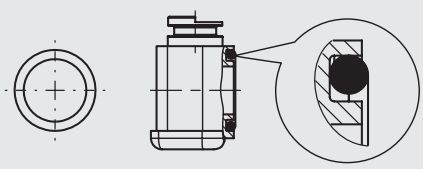

INSTALLATION INFORMATION (dimensions in mm)

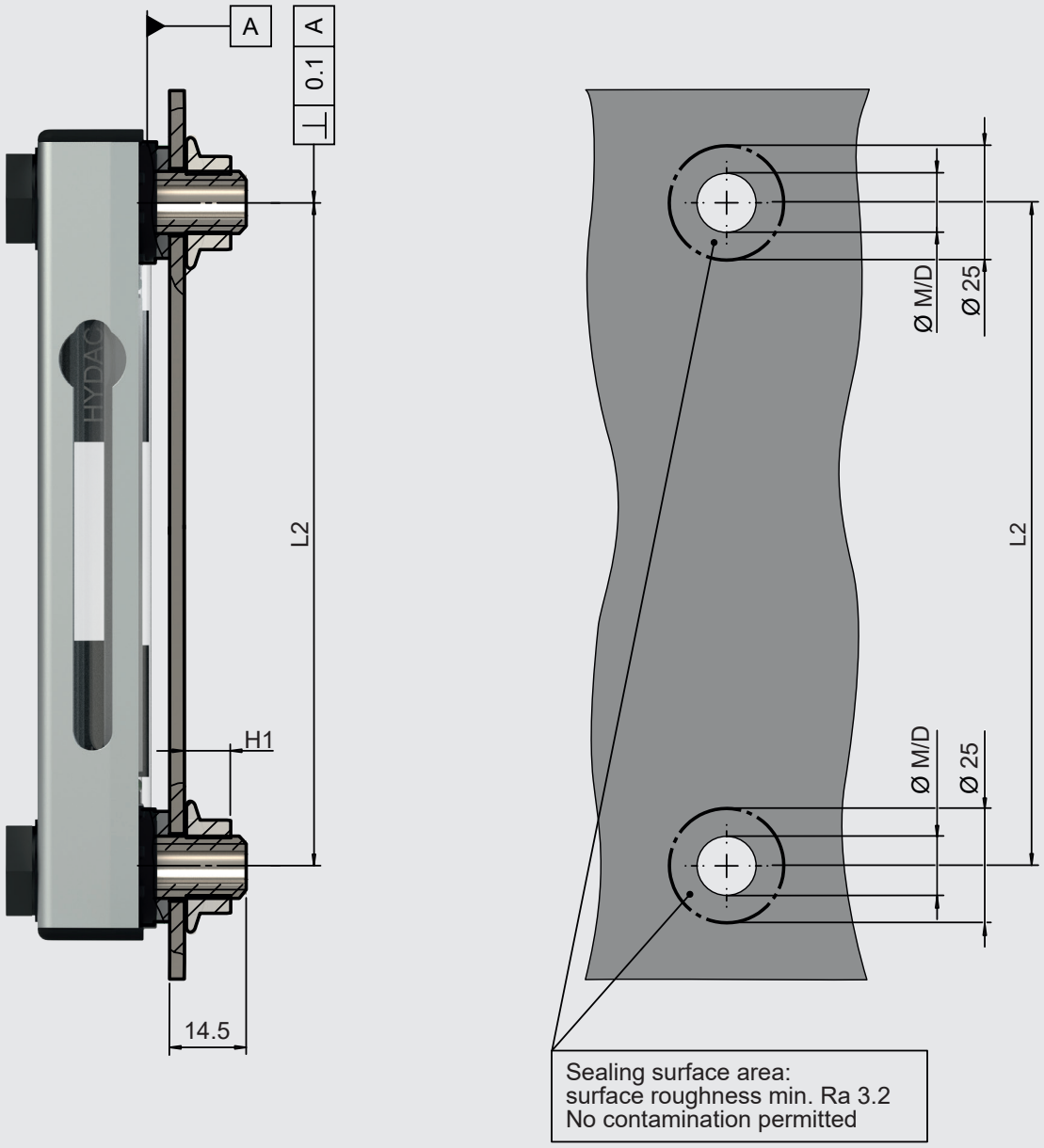

Screw	Nut	Threaded hole ØM	Through-hole ØD	H1	Tightening torque, screw Dry/lubricated
M12, SW17	M12, SW18	M12 – min. 6 mm deep	13 mm	12 mm	$8_{-0.5}$ Nm / $6^{+0.5}$ Nm
M10, SW17	M10, SW16	M10 – min. 5 mm deep	11 mm	10 mm	$8_{-0.5}$ Nm / $6^{+0.5}$ Nm

SPARE PARTS

Seal kit, standard (2x2 O-ring, 2x sealing washer)

Nom. size	Size	Material	Order no. = part no.
127 - 381	M12	NBR	4334716
127 - 381	M10	NBR	4664374

NOTE

The information in this brochure relates to the operating conditions and applications described.

For applications and/or operating conditions not described please contact the relevant technical department.

The operator is always responsible for determining the product suitability for the specific application. Quantified values for product characteristics are average values for a new product that undergo a time deterioration process.

Subject to technical modifications and errors.

HYDAC Accessories GmbH
Hirschbachstr. 2
66280 Sulzbach/Saar, Germany
Tel.: +49 6897 - 509-01
Internet: www.hydac.com
E-mail: info@hydac.com

EN 5.050.12.0/10.23